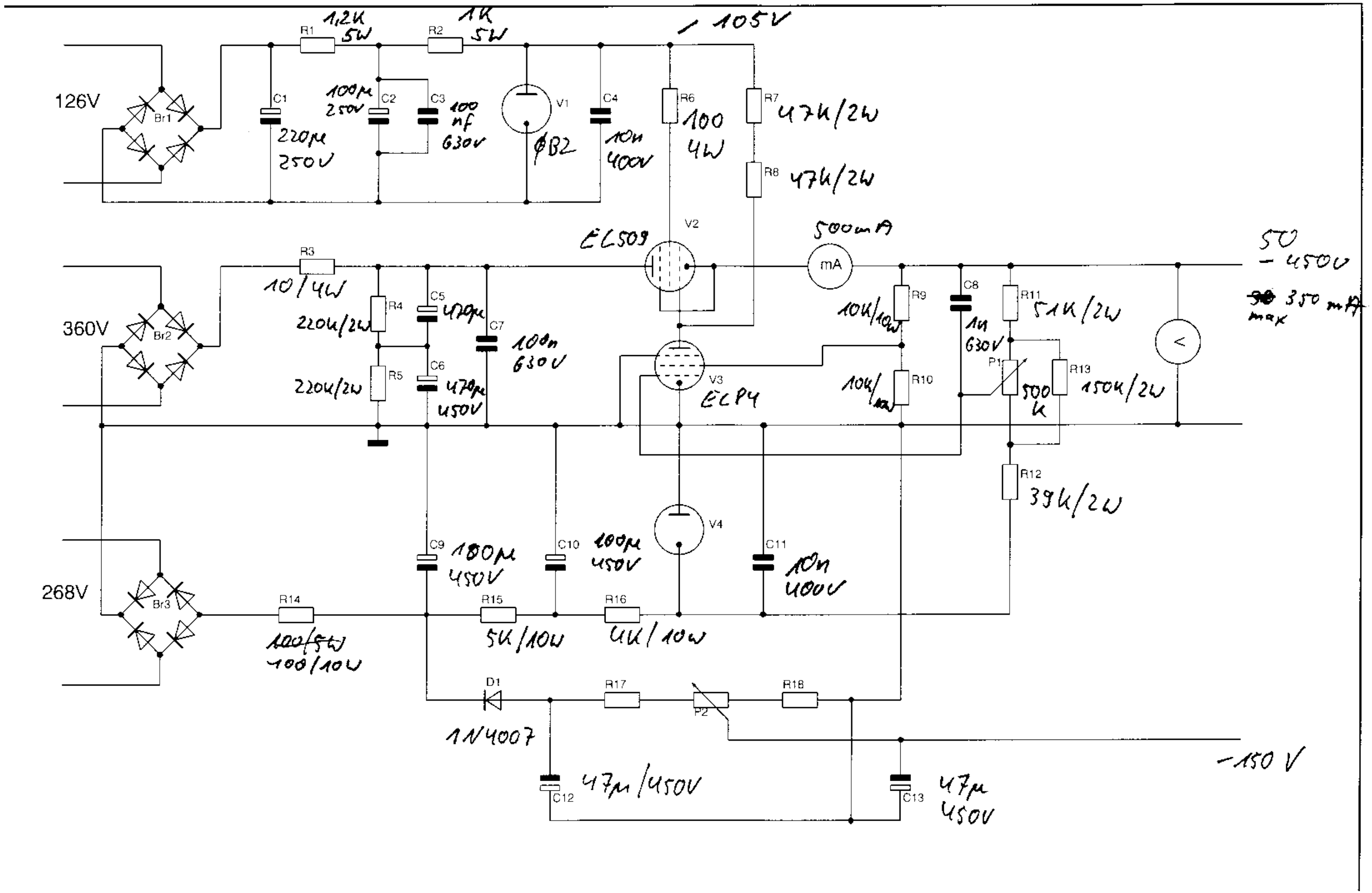
126V
360V
268V
Br1
Br2
Br3
R1 1,2K 5W
R2 1K 5W
C1 220µ 250V
C2 100µ 250V
C3 100 nf 630V
V1 ØB2
C4 10n 400V
/ 105V
R6 100 4W
R7 47K/2W
R8 47K/2W
V2 ECL509
500mA
mA
R3 10/4W
R4 220K/2W
R5 220K/2W
C5 470µ
C6 470µ 450V
C7 100n 630V
V3 ECP4
R9 10K/10W
R10 10K/10W
C8 1µ 630V
R11 51K/2W
P1 500 K
R13 150K/2W
R12 39K/2W
50 – 450V
350 mA max
V4
C9 100µ 450V
C10 100µ 450V
C11 10n 400V
R14 100/5W 100/10W
R15 5K/10W
R16 4K/10W
D1 1N4007
R17
P2
R18
C12 47µ/450V
C13 47µ 450V
–150 V