FENDER MODEL "BANDMASTER-AMP AA763" SCHEMATIC P/B NOTICE

THIS PRODUCT MANUFACTURED UNDER ONE OR MORE OF THE FOLLOWING US PATENTS - #2817708, #2973681, 192859
#PATENTS PENDING

J-FC

1 - VOLTAGES READ TO GROUND WITH ELECTRONIC VOLTMETER VALUES SHOWN + OR - 20%
2 - ALL RESISTORS 1/2 WATT, 10% TOLERANCE IF NOT SPECIFIED
3 - ALL CAPACITORS AT LEAST 400 VOLT RATING IF NOT SPECIFIED

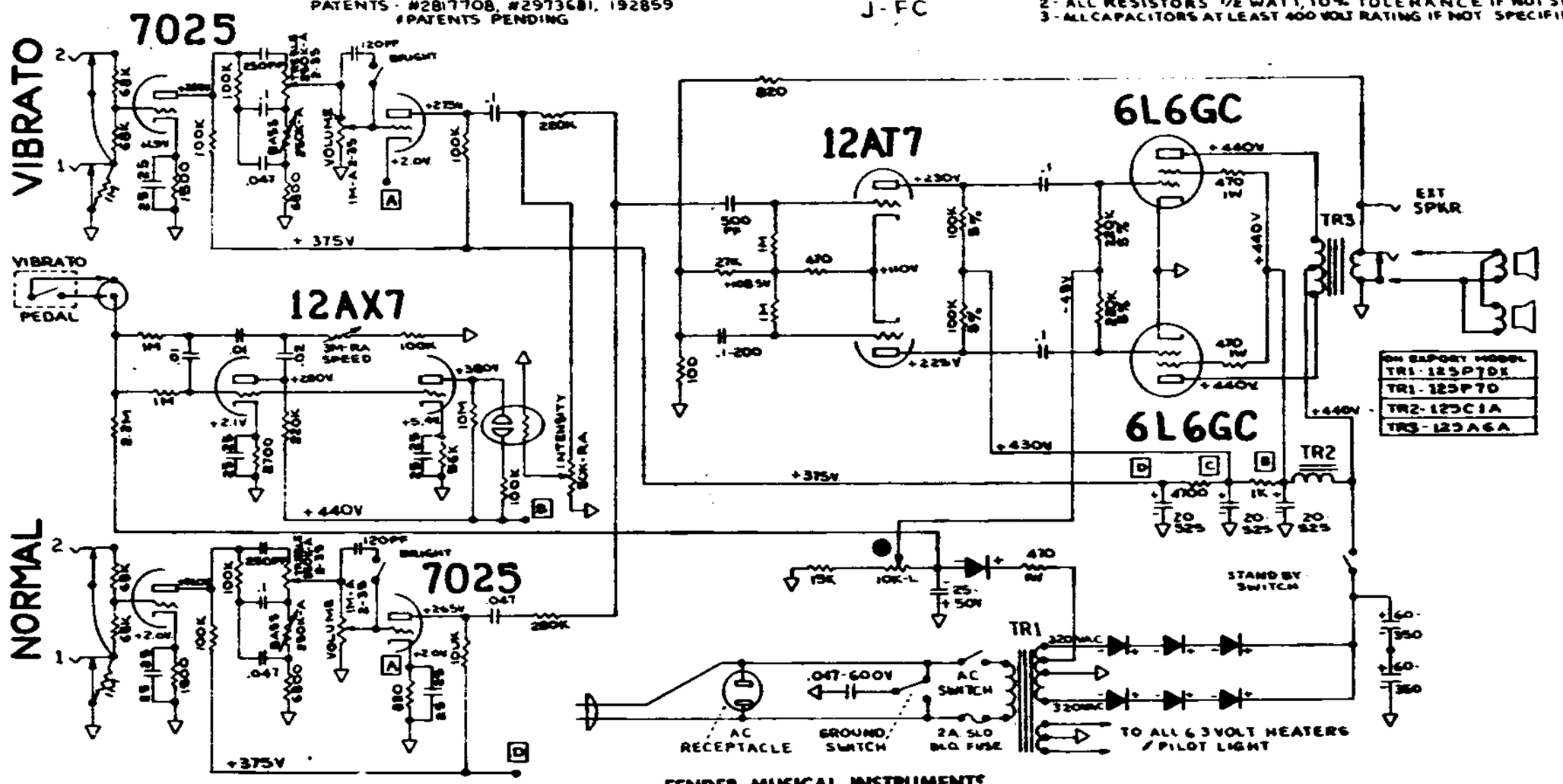

FENDER MUSICAL INSTRUMENTS
A DIVISION OF COLUMBIA RECORDS DISTRIBUTION CORP.
SANTA ANA, CALIFORNIA
U.S.A.