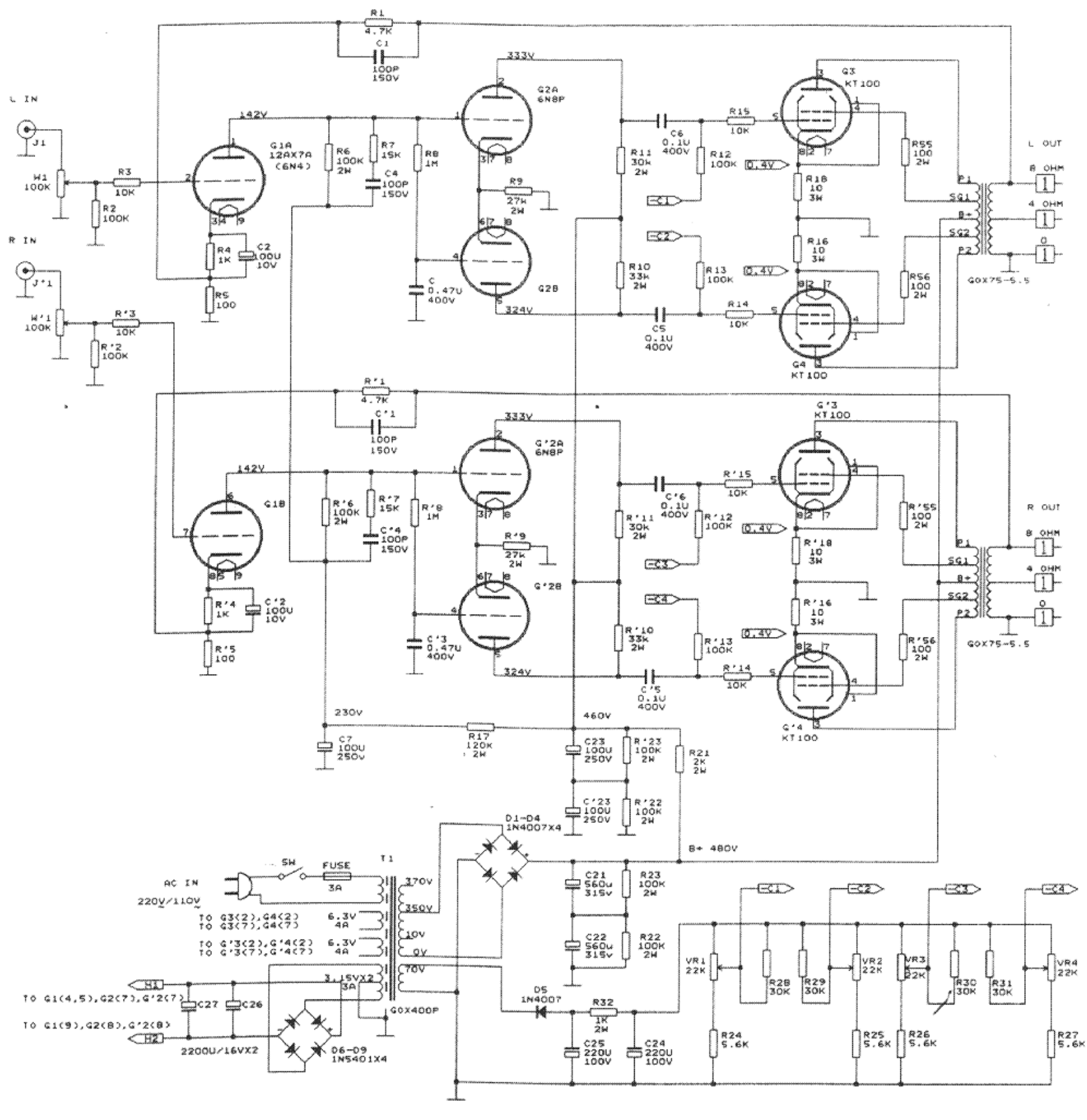

CHANGES WITHOUT NOTICE