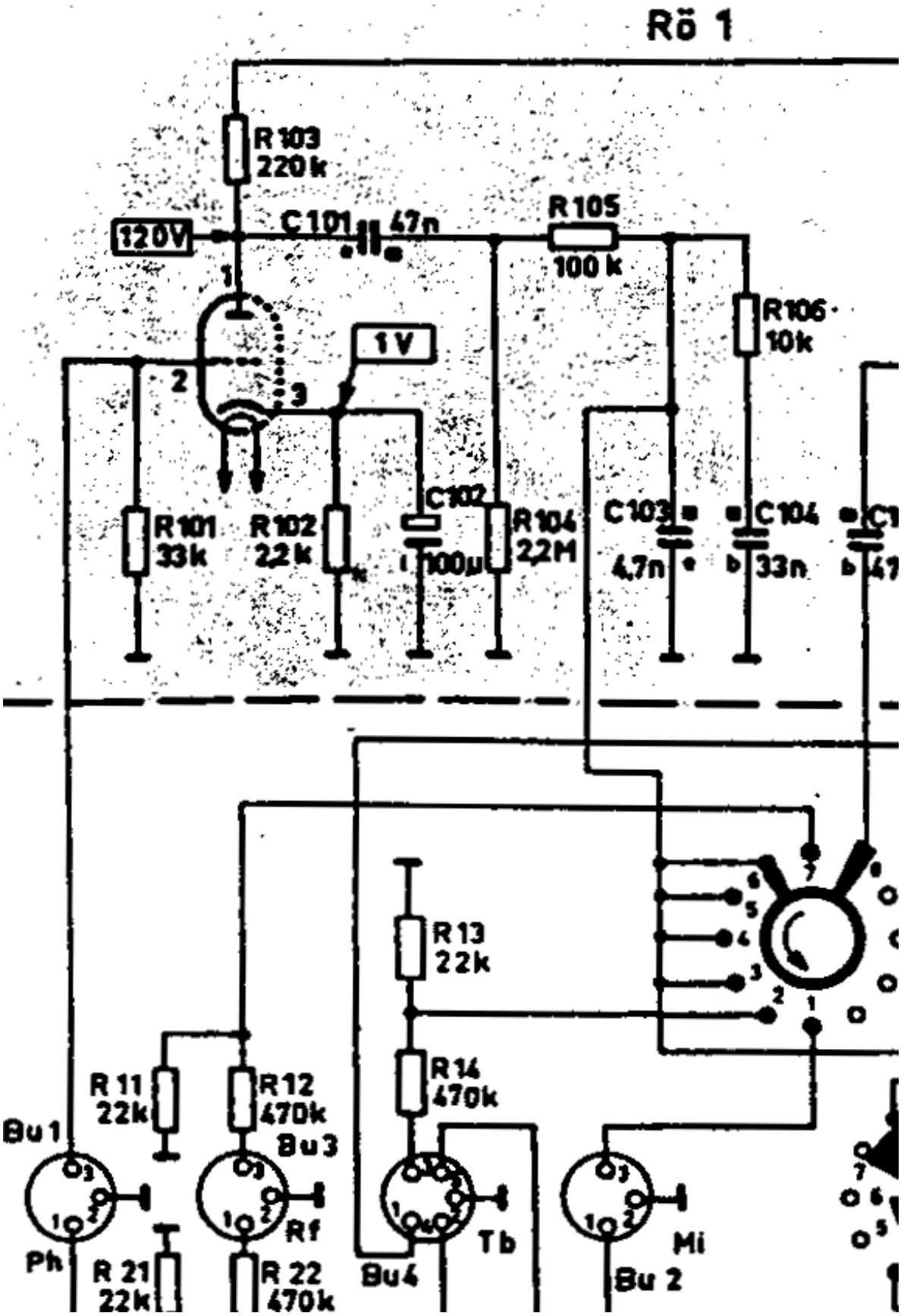
Rö 1
R 103
220 k
120V
C 101
47n
R 105
100 k
R 106
10k
1V
R 101
33k
R 102
2,2 k
C 102
100µ
R 104
2,2M
C 103
4,7n
C 104
33n
R 13
22k
R 14
470k
R 11
22k
R 12
470k
Bu 1
Bu 3
Ph
Rf
R 21
22k
R 22
470k
Bu 4
Tb
Mi
Bu 2
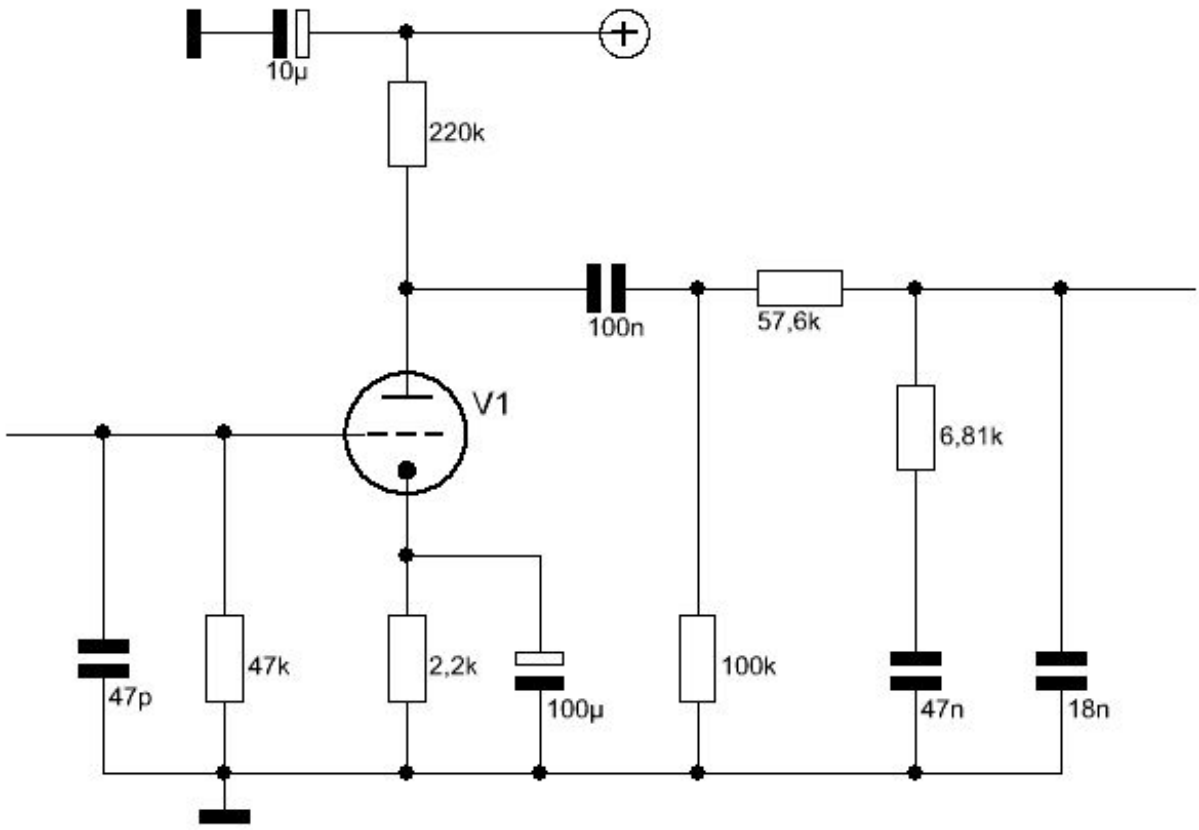
Die neue Phono-Vorstufe